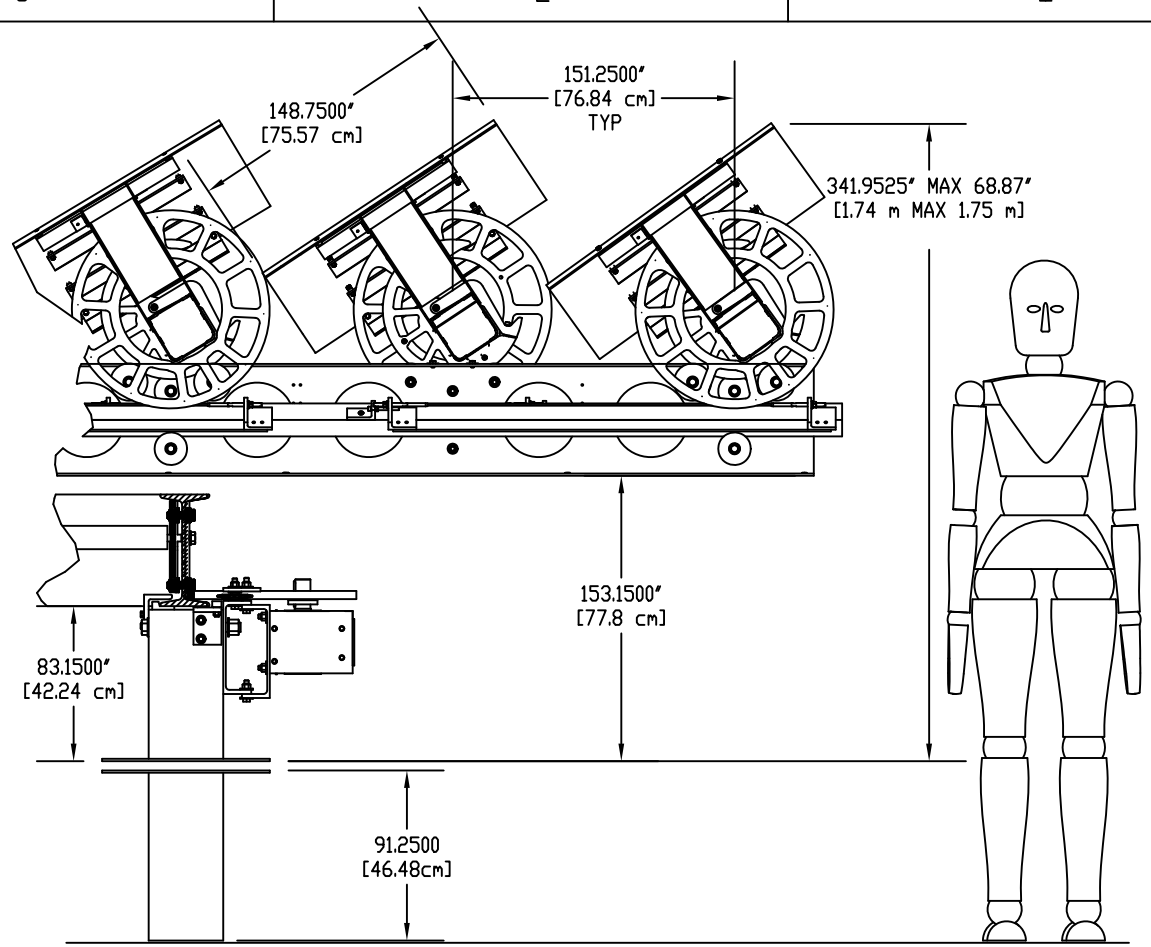

DETAIL SECTION
SCALE 0.100

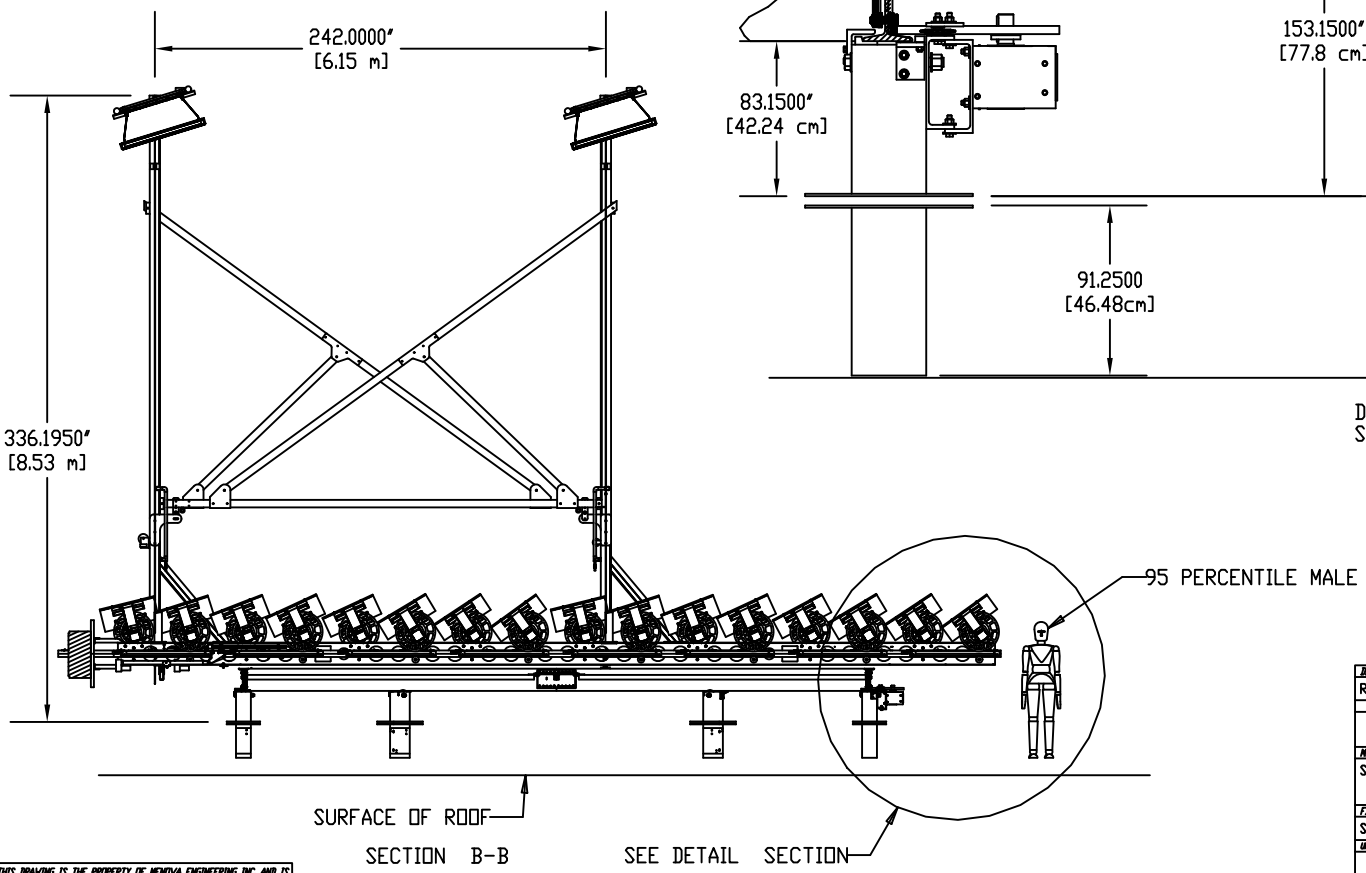

SECTION B-B

THIS DRAWING IS THE PROPERTY OF MENOVA ENGINEERING INC. AND IS SUBMITTED FOR CONSIDERATION ON THE UNDERSTANDING THAT THERE SHALL BE NO EXPLOITATION OF ANY INFORMATION HEREIN EXCEPT WITH THE SPECIFIC WRITTEN CONSENT OF MENOVA ENGINEERING INC.

Sample only. Subject to change.

DESIGNER: RRS	DATE: 12DEC2008		Menova ENERGY INC.
DRAFT APPR.	ENG APPR	CUST. APPR	
MATERIAL: SEE BOM		3RD ANGLE PROJ	TITLE: PS-140 TOP LEVEL MECHANICAL ASSEMBLY
FINISH: SEE DRAWING			SIZE: C — RFP-000-009
UNLESS OTHERWISE SPECIFIED, ALL DIMENSIONS ARE IN INCHES.			
DECIMAL TOLERANCE: .X +/- .020; .XX +/- .010; .XXX +/- .005	ANGLES: +/- 0.5	SURFACE: 63	SCALE: 0.020 — SHEET 2 OF 3